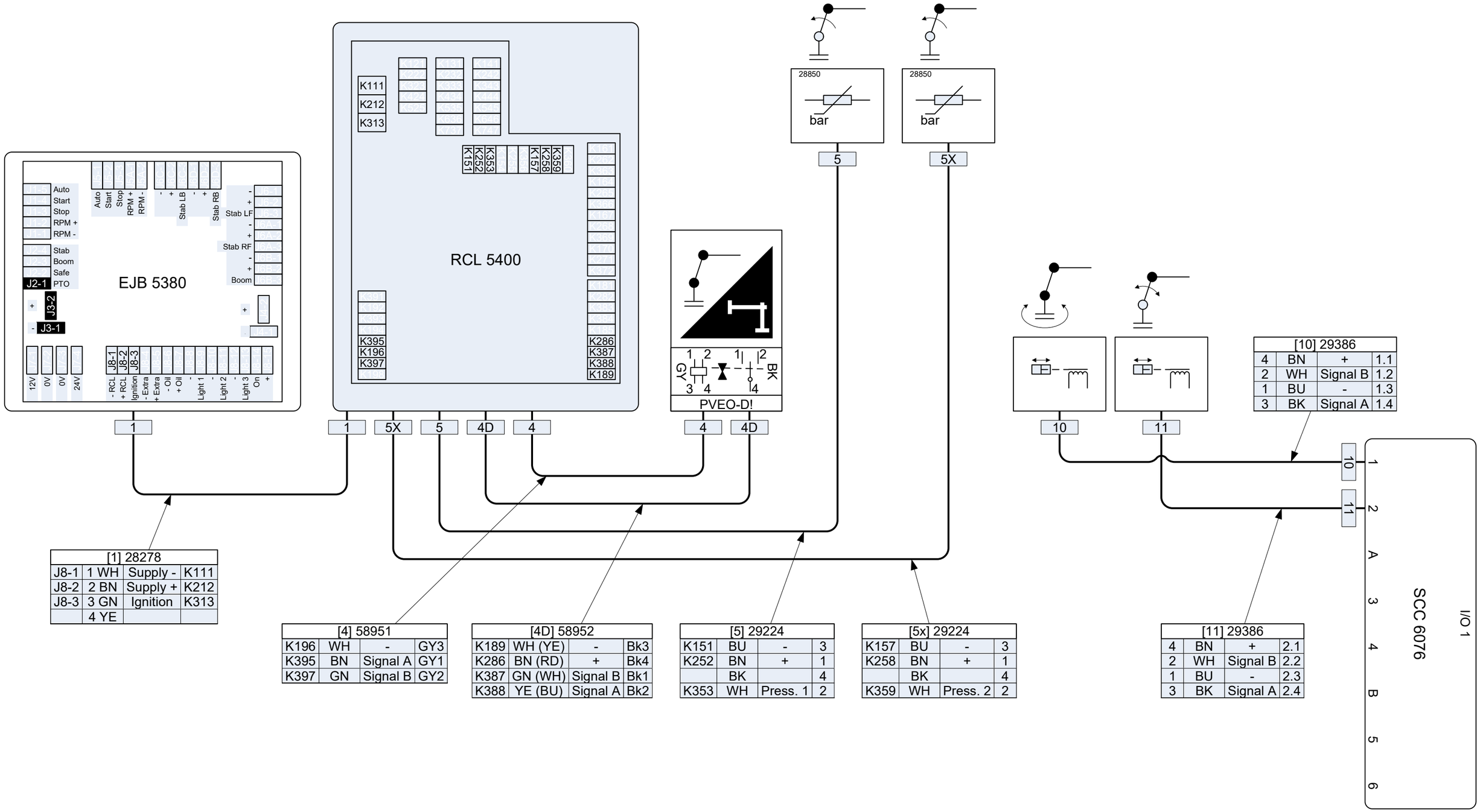

[1] 28278			
J8-1	1 WH	Supply -	K111
J8-2	2 BN	Supply +	K212
J8-3	3 GN	Ignition	K313
	4 YE		

[4] 58951			
K196	WH	-	GY3
K395	BN	Signal A	GY1
K397	GN	Signal B	GY2

[4D] 58952			
K189	WH (YE)	-	Bk3
K286	BN (RD)	+	Bk4
K387	GN (WH)	Signal B	Bk1
K388	YE (BU)	Signal A	Bk2

[5] 29224			
K151	BU	-	3
K252	BN	+	1
	BK		4
K353	WH	Press. 1	2

[5x] 29224			
K157	BU	-	3
K258	BN	+	1
	BK		4
K359	WH	Press. 2	2

[10] 29386			
4	BN	+	1.1
2	WH	Signal B	1.2
1	BU	-	1.3
3	BK	Signal A	1.4

[11] 29386			
4	BN	+	2.1
2	WH	Signal B	2.2
1	BU	-	2.3
3	BK	Signal A	2.4

Revision		
Nr.	Date	Sign.
A	06.10.2021	BWK

Product: RCL 5400

Part: Standard

Højbjerg Maskinfabrik as
Oddervej 200 - DK-8270 Højbjerg

Date: 06.10.2021
Sign.: BWK
Drawing size: A3
Replacing
Drawing nr.: 70 22 031 03
Rep. by